BACKPACK

ITEM NO.	PART CODE	DESCRIPTION	QTY.
1	MSS02-B	BACK PACK	1
2	MSJ09B	WATER/SOLUTION BOTTLE	1
3	MSJ11	IN LINE CHECK VALVE	1
4	J1SUB2	JET PUMP ASSEMBLY	1
5	12V7ADC or 12V18ADC	BATTERY	1
6	MSJ08E	COILED WATER PIPE	1
7	MSJ02C	2 CORE COILED PUMP CABLE	1
8	MSJ07B	WATER PIPE	1
9	MSJ01D-3PIN	3 CORE COILED CABLE (CHARGING 3-PIN CHARGER)	1
10	MSJ15B	HOSE END SUCTION FILTER	1
11	MSJ10B	JET BOTTLE CAP	1
12	MSJ45	CHARGING CABLE CONNECTION (FOR 2 PIN CHARGERS)	1
13	MS1580 or MSCHARGELITH6AMP	BATTERY CHARGER	1
14	MSPAUK/US/AU/EU	REGIONAL SPECIFIC PLUG ADAPTOR FOR CHARGER	1

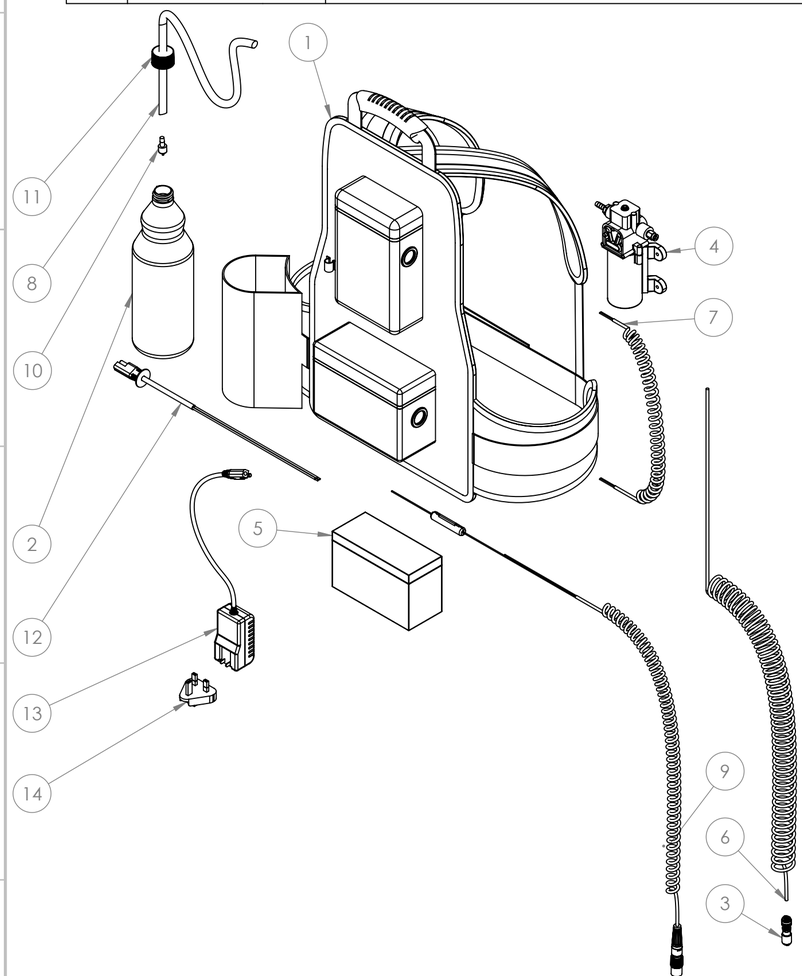

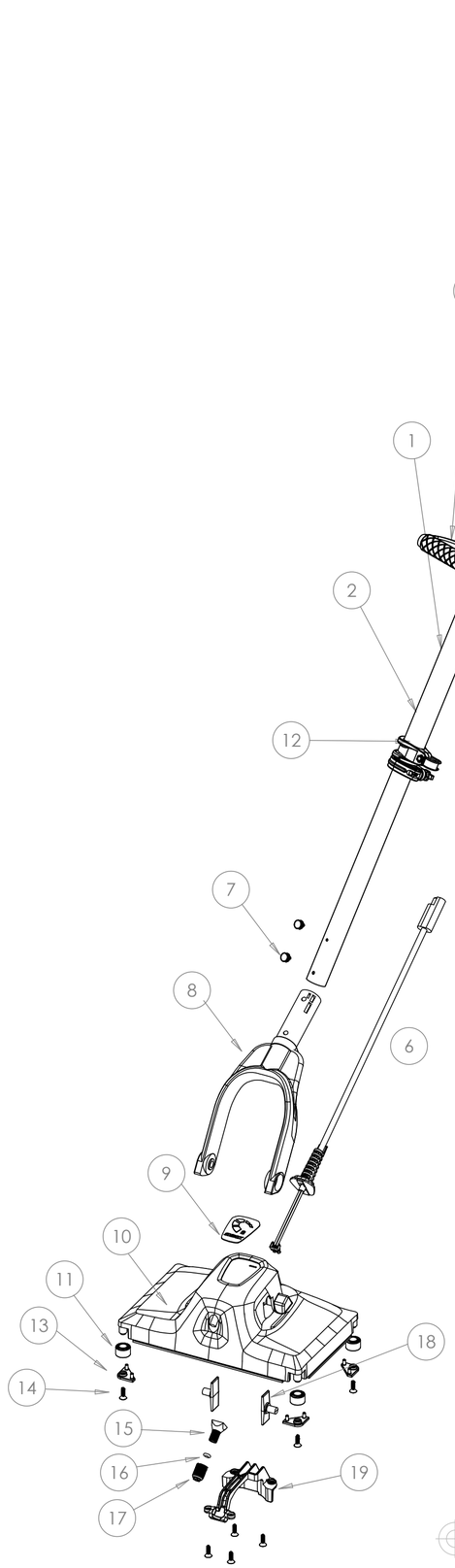

J2SUB2BE-3PIN

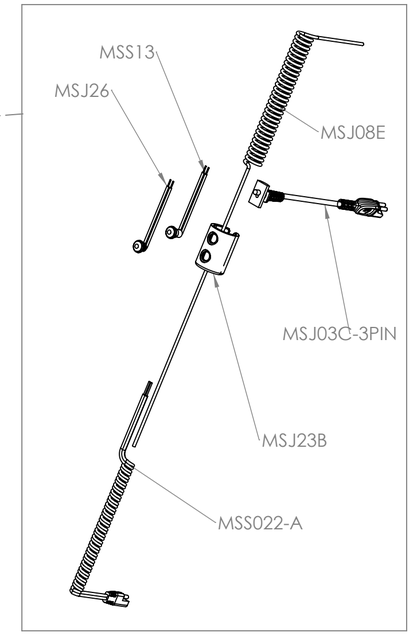

HANDLE

ITEM NO.	PART CODE	DESCRIPTION	QTY.
1, 2	MS3003R	ALUMINIUM TUBE	1
3	MS3004C	GRAB HANDLE	1
4	MSS103	RUBBER GRIP	1
5	J2SUB2E-3PIN	JET SWITCH HOUSING	1
6	011-0040	SHOCK HEAD CABLE	1
7	MSS172B	THUMB SCREW	2
8	MS3005B	YOKE	1
9	011-0055	BATTERY LEVEL INDICATOR	1
10	011-0001B	SHOCK HEAD COVER	1
11	011-0041B	CORNER WHEEL	1
12	MSS032	HANDLE FLIP CLIP 32mm	1
13	011-0010	CORNER BRACKET	1
14	011-0058B	M4*20MM COUNTERSUNK TORX PLASTIC SCREW	1
15	011-0082	NOZZLE BODY WITH CHECK VALVE	1
16	MST6	O-RING (VITON)	1
17	011-0017	SHOCK HEAD CABLE	1
18	011-0054	YOKE PIVOT PLATE	2
19	011-0039	INTERNAL HOSE RESTRAINT	1

REVISION	CHANGE NOTES
REV.	
STATUS In Work	Initial Release

MOTOR SCRUBBER®
8c Orgreave Road, Sheffield
United Kingdom, S13 9LQ
T. (+44) 114 478 8710

PROPRIETARY AND CONFIDENTIAL
The data and information disclosed on this drawing are the exclusive property of Motor Scrubber and may be subject of U.K.and foreign patents and/or applications. Reproduction, copying, disclosure or use of this drawing,data and information without the written permission of Motor Scrubber is strictly Prohibited. Copyrighted.

Part Code: SHOCK

Drawn by: SAMUEL CARR | Date: 17/04/2024

Approved By: | Date:

Description: SHOCK ASSEMBLY DRAWING

Weight (g): 1930.53

All dimensions in mm unless otherwise specified | SHEET SIZE: A2 | SCALE:1:6 | SHEET 1 OF 1